Network Wide
Optical Transceivers

DEM-310GM2- NW

GBIC 500m, SX, 850nm

Features:

- Dual data-rate of 1.25Gbps/1.0625Gbps operation
- Duplex SC, Multi-Mode Transceiver
- 850nm VCSEL Laser
- Compliant with IEC 60825-1 Class 1/CDRHClass I Laser Eye Safe
- RoHS Compliant Products Available

Applications:

- Switch to Switch interface
- Switched backplane applications
- Router/Server interface
- Other optical transmission systems

Product Description:

DEM-310GM2-NW Transceiver is a high performance, cost effective module supporting dual data-rate of 1.25Gbps/1.0625Gbps and 500m transmission distance on MMF. It is fully compatible with GBIC specification, Rev5.5. It can be inserted in or removed from host chassis without shutting power of the host system. It uses 850nm VCSEL laser for LR-2 applications.

Standards:

- Compatible with GBIC specification, Rev 5.5
- Compatible with IEEE 802.3z
- Compatible with specifications for Fibre Channel
- Compatible with FDA 21 CFR 1040.10 and 1040.11, Class I

Copyright NetworkWide. Do Not Copy or Distribute. All Rights Reserved

Network Wide
Optical Transceivers

NW Optical Transmitter Eye Diagrams

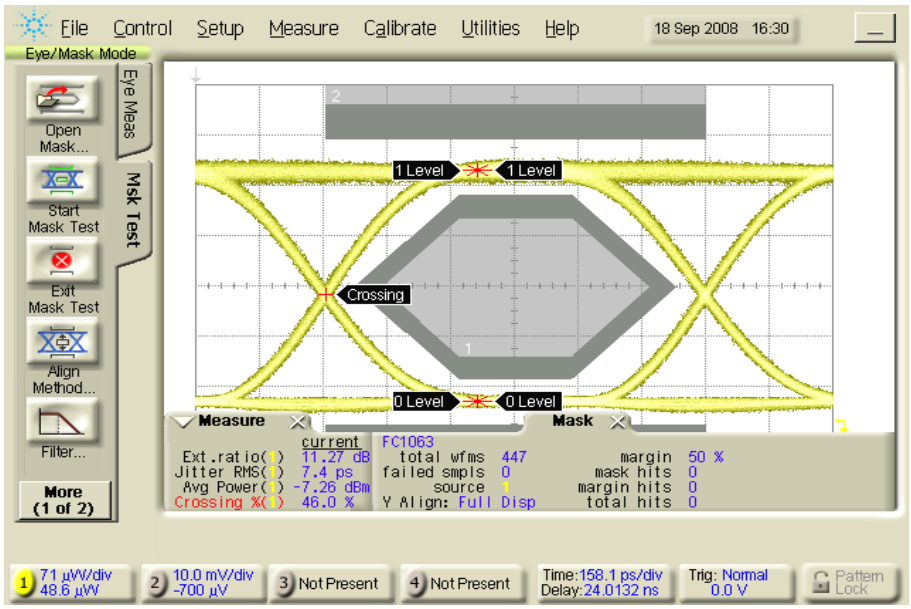

NW Transmitter Eye Mask

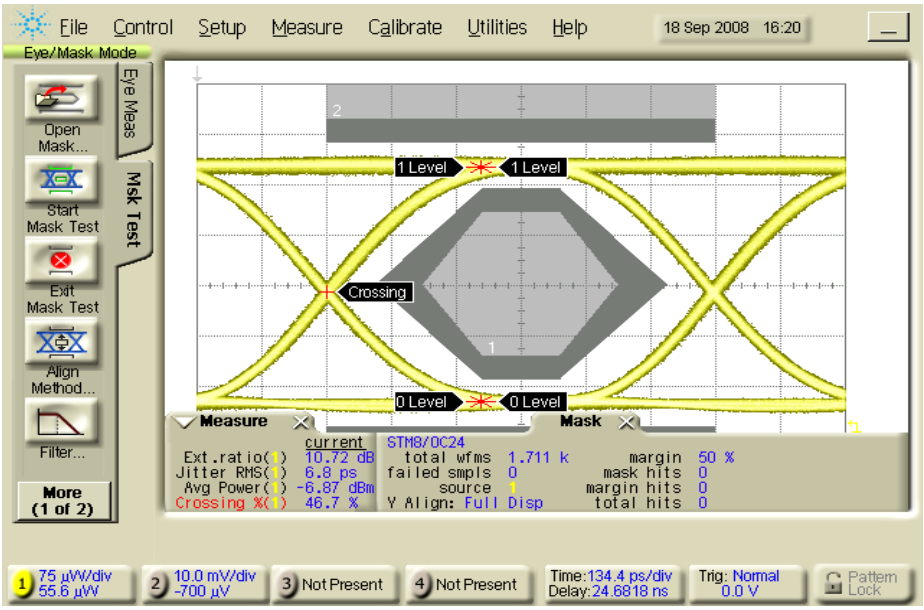

NW EEPROM Section

The NW optical transceiver contains an EEPROM NW. It provides access to sophisticated identification information that describes the transceiver's capabilities, standard interfaces, manufacturer.

Copyright NetworkWide. Do Not Copy or Distribute. All Rights Reserved

Recommended Operating Conditions:

Parameter	Symbol	Min.	Typ.	Max.	Unit
Operating Case Temperature	Tc	0		+70	°C
Power Supply Current	Icc			300	mA
Data Rate			1.25		Gbps
Fiber Length on 50/62.5µm MMF	L		500		m

Figure 1 shows the block diagram of this product

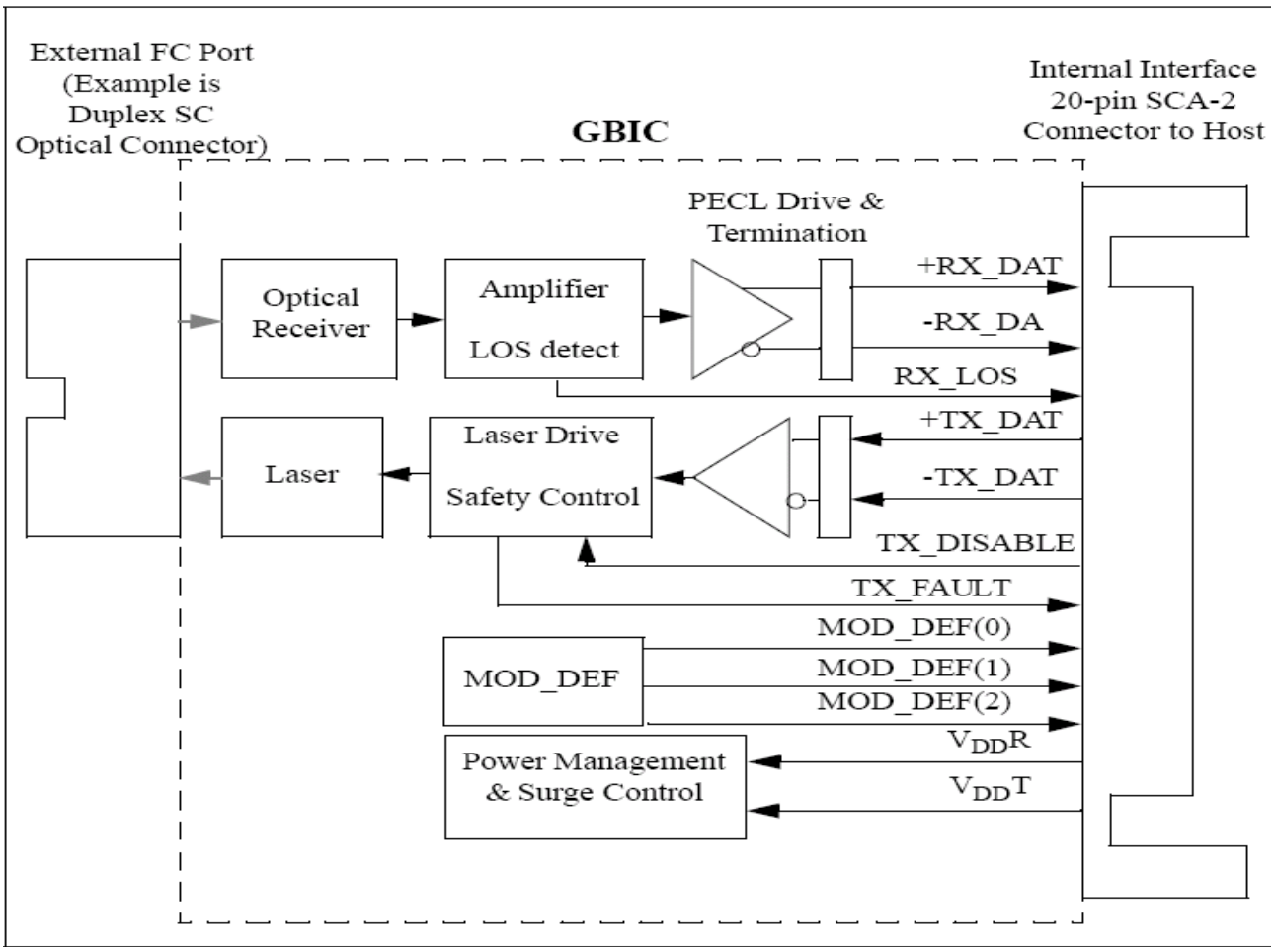

Figure 1: Product Block Diagram

Copyright NetworkWide. Do Not Copy or Distribute. All Rights Reserved

Figure 2 shows the mechanical design diagram of this product

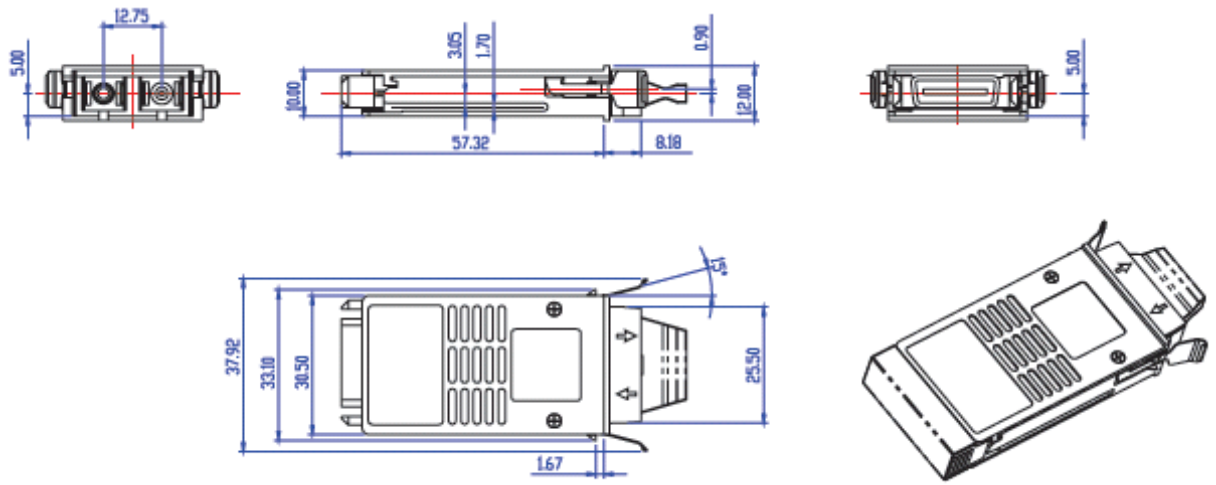

Figure 2: Mechanical Design Diagram (Dimension in mm)

Specification:

- **Absolute Maximum Ratings:**

Parameter	Symbol	Min.	Typical	Max.	Unit
Storage Temperature	TC	-40		+85	°C
Supply Voltage	V_{CC}T, R	-0.5		5.5	V
Relative Humidity	RH	5		95	%

Copyright NetworkWide. Do Not Copy or Distribute. All Rights Reserved

○ Specifications (T=25°C, BOL, unless otherwise noted)

Parameter	Symbol	Min.	Typical	Max.	Unit
High Speed Signal					
Parameter	**Symbol**	**Min.**	**Typical**	**Max.**	**Unit**
Transmitter Data Input Voltage – Low	VIL–VCC	–1.810		–1.475	V
Transmitter Data Input Voltage – High	VIH–VCC	–1.165		–0.880	V
Data Input Swing Differential	VIN	500		2400	mV
Data Output Load	RDL		50		□
Data Output Voltage – Low	VOL – VCC	–1.950		–1.620	V
Data Output Voltage – High	VOH – VCC	–1.045		–0.740	V
Data Output Swing Differential	Vout	400		1200	mV
Transmitter Section:					
Parameter	**Symbol**	**Min.**	**Typical**	**Max.**	**Unit**
Center Wavelength	C	760	850	860	nm
Side Mode Suppression Ratio	SMSR	30			dB
Optical Output Power	Pout	-9		-3	dBm
Extinction Ratio	E.R	9.2		13	dB
Eye Margin	Max M	24			%
Receiver Section:					
Parameter	**Symbol**	**Min.**	**Typical**	**Max.**	**Unit**
Optical Input Wavelength	□C	840		860	nm
Receiver Overload		-3			dBm
RX Sensitivity	Sen			-17	dBm
LOS De-Assert	LOSD			-22	dBm
LOS Assert	LOSA	-28			dBm
LOS Hysteresis		1		4	dB
Dispersion Penalty			2	2.5	dB
Total System Budget	LB	35			dB

Copyright NetworkWide. Do Not Copy or Distribute. All Rights Reserved

Network Wide
Optical Transceivers

DEM-310GM2-NW NETWORKWIDE EEPROM Serial ID Memory Contents:

Data Address	Field Size (Bytes)	Name of Field	Description and Contents
Base ID Fields			
0	1	Identifier	Type of Serial transceiver (01h=GBIC)
1	1	Ext. Identifier	Extended identifier of type serial transceiver (04h)
2	1	Connector	Code of optical connector type (01h=SC)
3-10	8	Transceiver	000Base-SX & Fiber Channel
11	1	Encoding	8B10B (01h)
12	1	BR,Nominal	Nominal baud rate, unit of 100Mbps
13-14	2	Reserved	(0000h)
15	1	Length(9um)	Link length supported for 9/125um fiber, units of 100m
16	1	Length(50um)	Link length supported for 50/125um fiber, units of 10m
17	1	Length(62.5um)	Link length supported for 62.5/125um fiber, units of 10m
18	1	Length(Copper)	Link length supported for copper, units of meters
19	1	Reserved	
20-35	16	Vendor Name	SFP vendor name: NETWORKWIDE
36	1	Reserved	
37-39	3	Vendor OUI	SFP transceiver vendor OUI ID NETWORKWIDE
40-55	16	Vendor PN	Part Number: NETWORKWIDE
56-59	4	Vendor rev	“31 30 20 20” means 1.0 revision NETWORKWIDE
60-62	3	Reserved	
63	1	CC_BASE	Check sum of bytes 0 - 62
Extended ID Fields			
64-65	2	Option	Indicates which optical SFP signals are implemented (001Ah = LOS, TX_FAULT, TX_DISABLE all supported)
66	1	BR, max	Upper bit rate margin, units of %
67	1	BR, min	Lower bit rate margin, units of %
68-83	16	Vendor SN	Serial number: NW
84-91	8	Date code	Year(2 bytes), Month(2 bytes), Day (2 bytes)
92-94	3	Reserved	
95	1	CC_EX	Check sum of bytes 64 - 94
Vendor Specific ID fields			
96-255	160	Readable	Vendor specific

NW Ordering information: E_mail: sales@networkwide.co.uk

Part Number	Product Description
DEM-310GM2- NW	850nm, GBIC

Copyright NetworkWide. Do Not Copy or Distribute. All Rights Reserved